Dijkstra's Algorithm

Stephen Freund
CSCI 136

Shortest Path (No Weights on Edges)

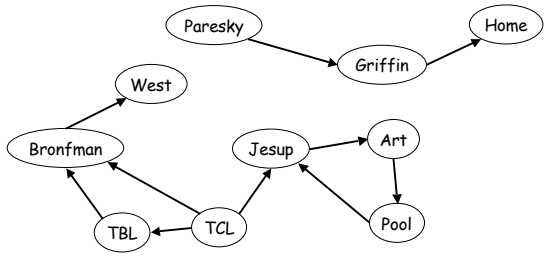

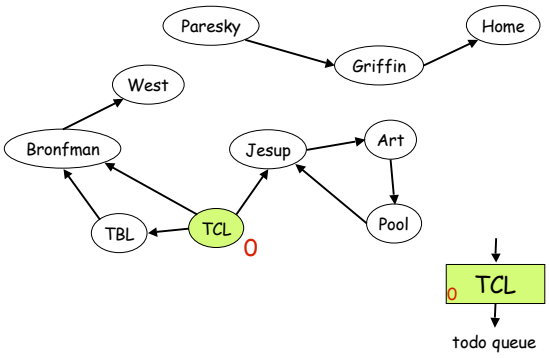

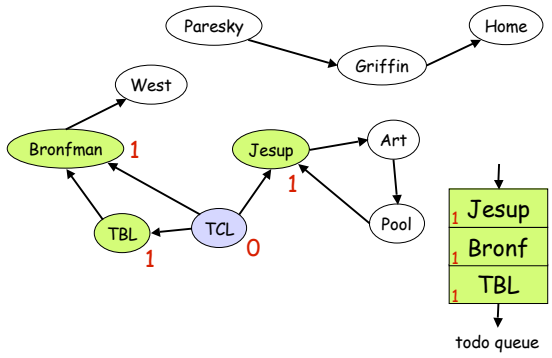

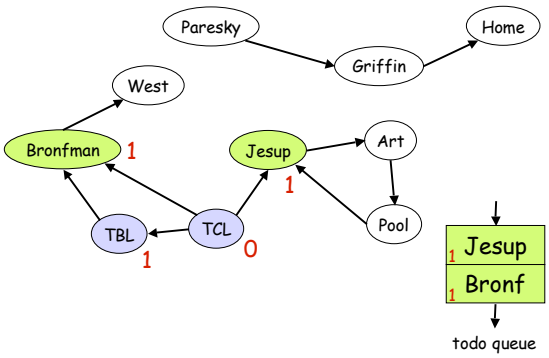

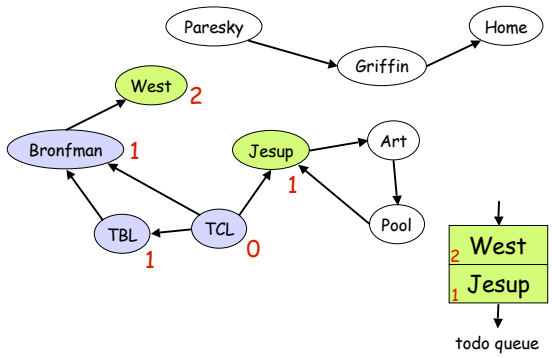

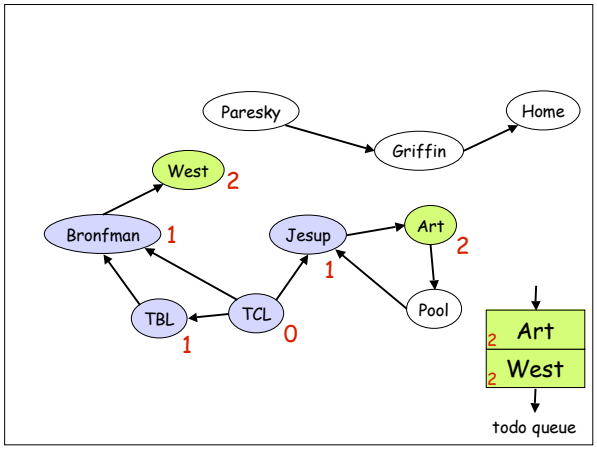
Paresky
Home
Griffin
West
2
Bronfman
1
Jesup
Art
2
1
Pool
TBL
TCL
1
0
2 Art
2 West
todo queue

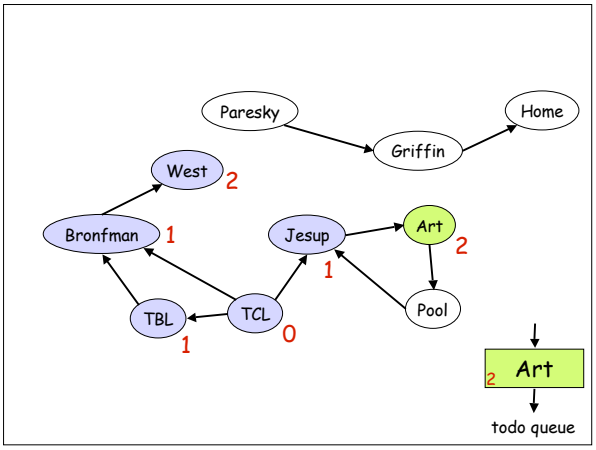
Paresky
Home
Griffin
West
2
Bronfman
1
Jesup
Art
2
1
Pool
TBL
TCL
1
0
2 Art
todo queue

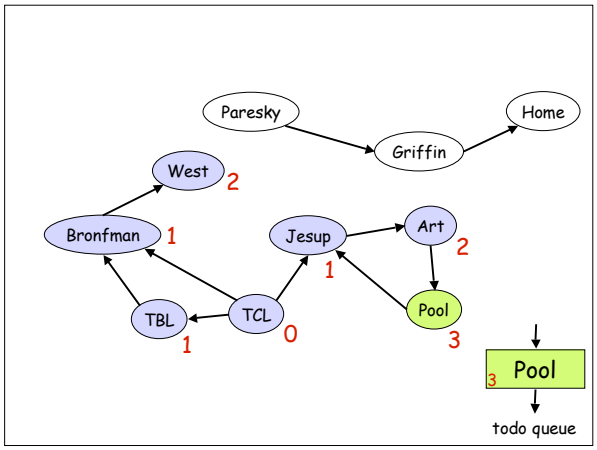
Paresky
Home
Griffin
West
2
Bronfman
1
Jesup
Art
2
1
Pool
3
TBL
TCL
1
0
3 Pool
todo queue

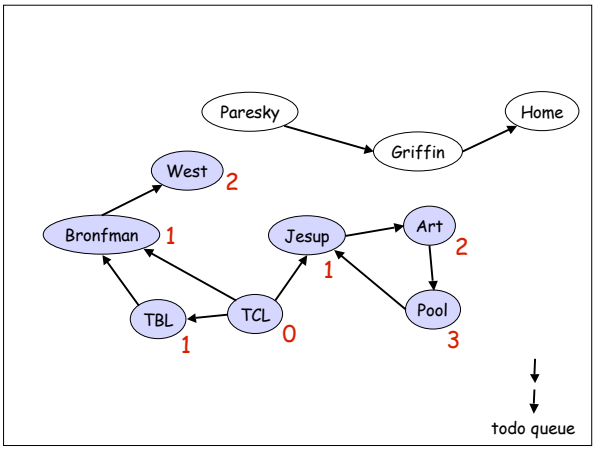
Paresky
Home
Griffin
West
2
Bronfman
1
Jesup
Art
2
1
Pool
3
TBL
TCL
1
0
todo queue

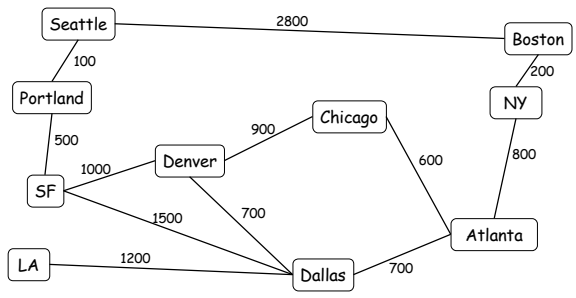
Seattle
2800
Boston
100
200
Portland
NY
Chicago
900
500
600
800
Denver
1000
SF
1500
700
Atlanta
LA
1200
Dallas
700

Intuition

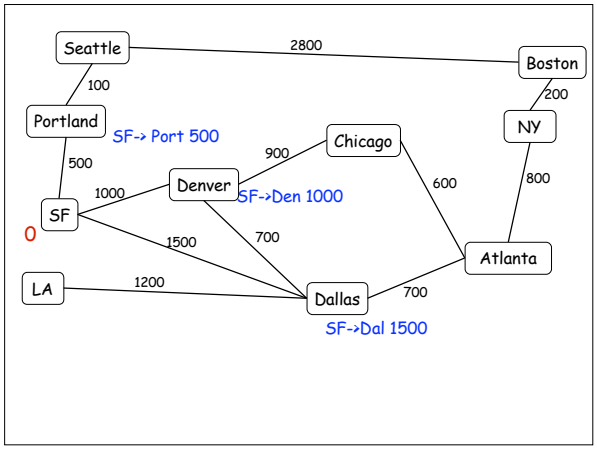
Seattle
2800
Boston
100
200
Portland
SF-> Port 500
Chicago
NY
900
500
Denver
600
800
1000
SF-->Den 1000
SF
0
1500
700
Atlanta
LA
1200
Dallas
700
SF-->Dal 1500

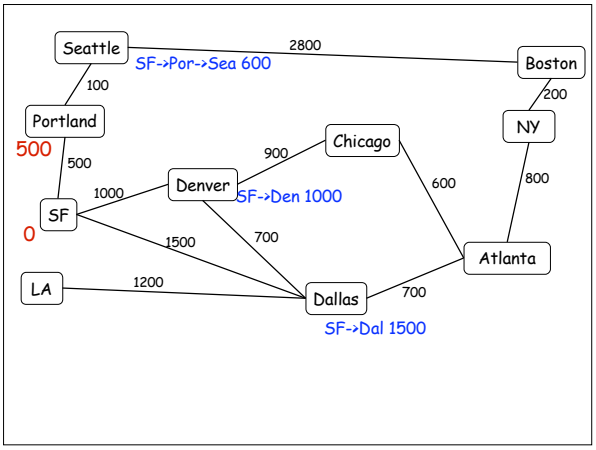
Seattle
2800
Boston
SF-->Por-->Sea 600
100
200
Portland
Chicago
NY
500
900
500
Denver
600
800
1000
SF-->Den 1000
SF
0
1500
700
Atlanta
LA
1200
Dallas
700
SF-->Dal 1500

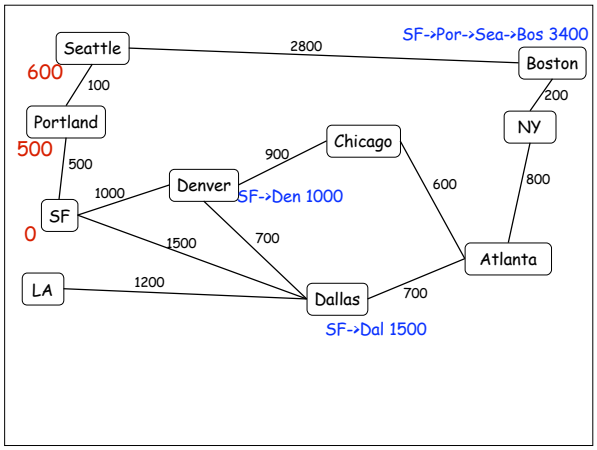
SF-->Por-->Sea-->Bos 3400
Seattle
2800
Boston
600
100
200
Portland
Chicago
NY
500
900
500
Denver
600
800
1000
SF-->Den 1000
SF
0
1500
700
Atlanta
LA
1200
Dallas
700
SF-->Dal 1500

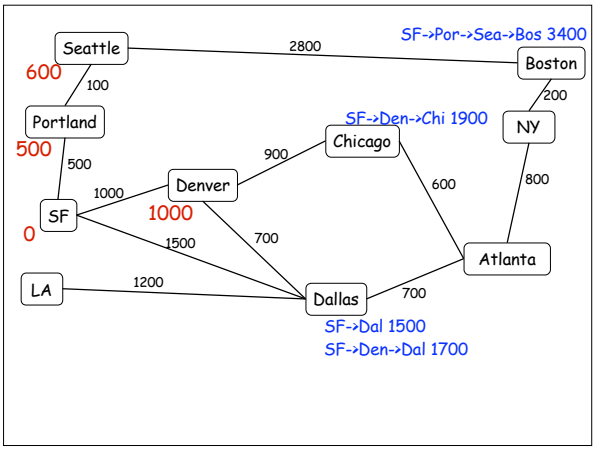
SF-->Por-->Sea-->Bos 3400
Seattle
2800
Boston
600
100
200
Portland
SF-->Den-->Chi 1900
Chicago
NY
500
900
500
Denver
600
800
1000
1000
SF
0
1500
700
Atlanta
LA
1200
Dallas
700
SF-->Dal 1500
SF-->Den-->Dal 1700

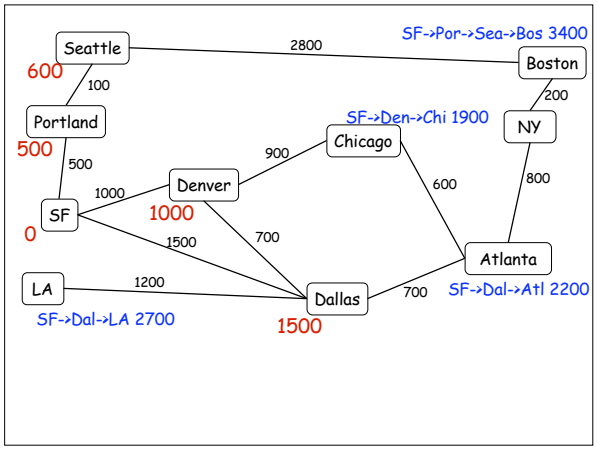
SF-->Por-->Sea-->Bos 3400
Seattle
2800
Boston
600
100
200
Portland
SF-->Den-->Chi 1900
Chicago
NY
500
900
500
Denver
600
800
1000
1000
SF
0
1500
700
Atlanta
LA
1200
Dallas
700
SF-->Dal-->Atl 2200
SF-->Dal-->LA 2700
1500

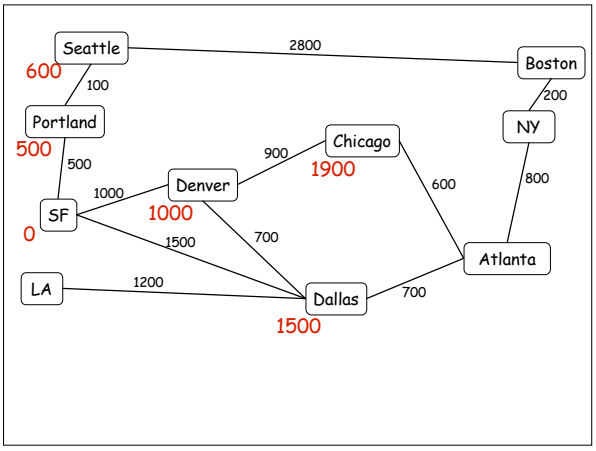
Seattle
2800
Boston
600
100
200
Portland
Chicago
NY
500
900
1900
500
Denver
600
800
1000
1000
SF
0
1500
700
Atlanta
LA
1200
Dallas
700
1500

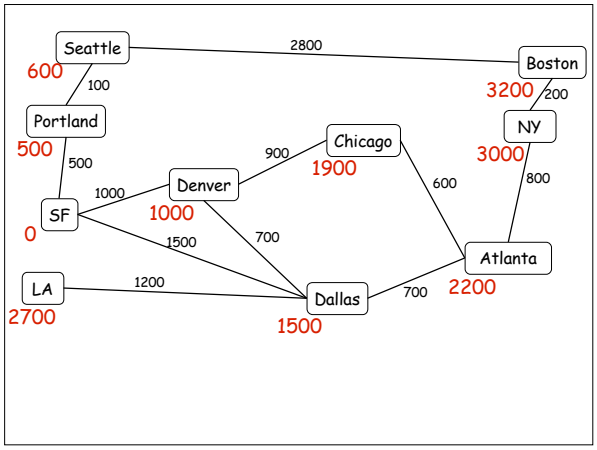
Seattle
2800
Boston
600
100
3200
200
Portland
NY
500
Chicago
900
3000
500
1900
600
800
1000
Denver
SF
1000
0
1500
700
Atlanta
LA
1200
Dallas
700
2200
2700
1500

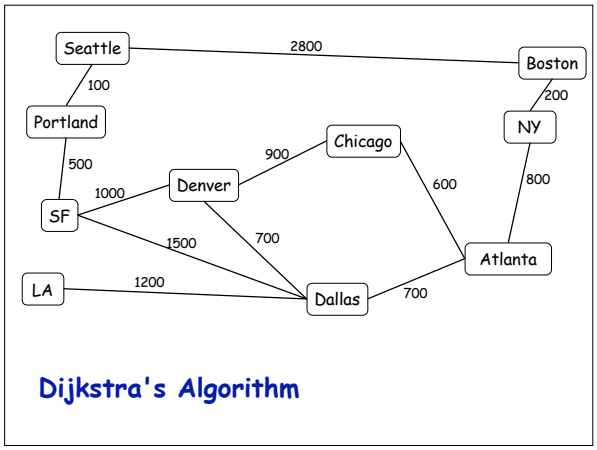
Seattle
2800
Boston
100
200
Portland
NY
Chicago
900
500
600
800
1000
Denver
SF
1500
700
Atlanta
LA
1200
Dallas
700
Dijkstra's Algorithm

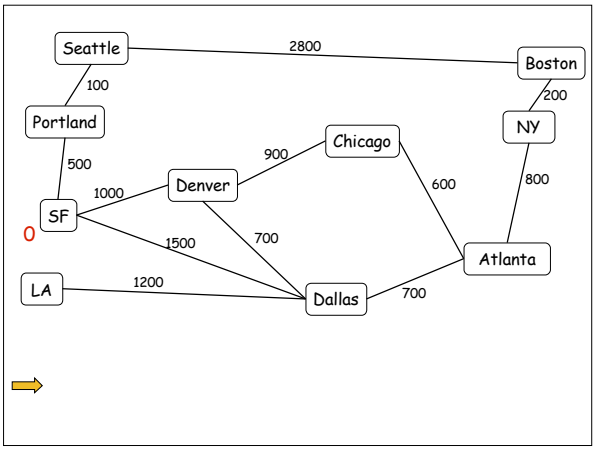
Seattle
2800
Boston
100
200
Portland
NY
Chicago
900
500
600
800
1000
Denver
SF
0
1500
700
Atlanta
LA
1200
Dallas
700

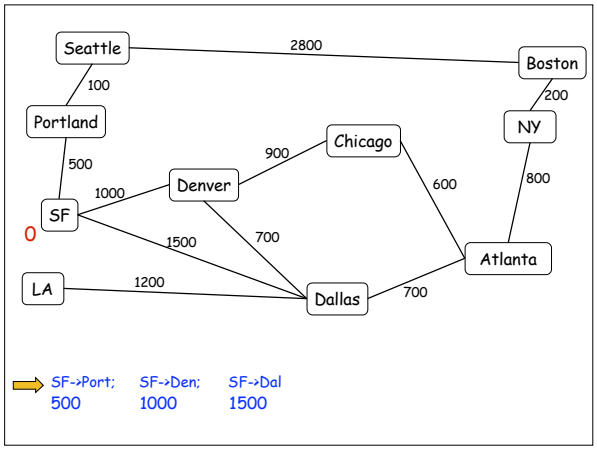
Seattle
2800
Boston
100
200
Portland
NY
Chicago
900
500
600
800
1000
Denver
SF
0
1500
700
Atlanta
LA
1200
Dallas
700
SF->Port;
500
SF->Den;
1000
SF->Dal
1500

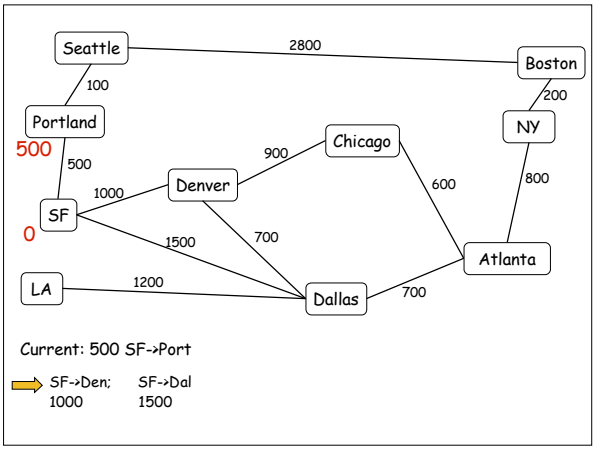
Seattle
2800
Boston
100
200
Portland
NY
500
Chicago
900
500
600
800
1000
Denver
SF
0
1500
700
Atlanta
LA
1200
Dallas
700
Current: 500 SF->Port
SF->Den;
1000
SF->Dal
1500

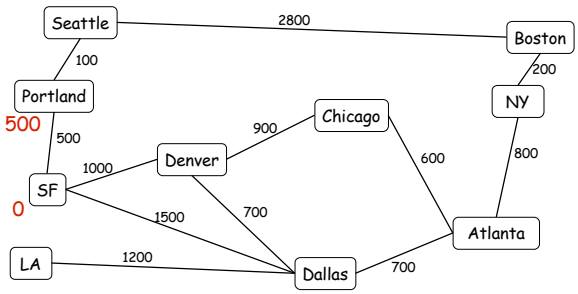

Current: 500 SF->Port

SF->Port->Sea; 600 | SF->Den; 1000 | SF->Dal 1500

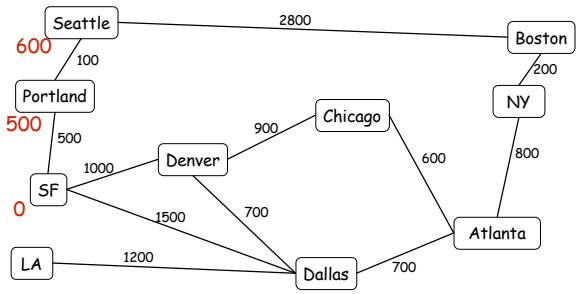

Current: 600 SF->Port->Sea

SF->Den; 1000 | SF->Dal 1500

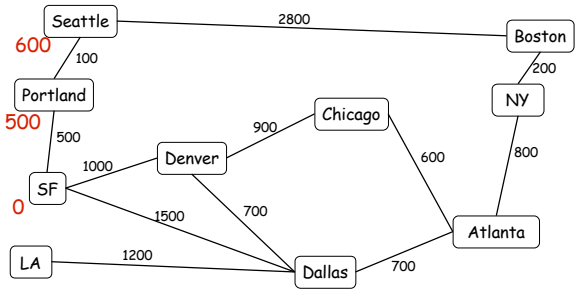

Current: 600 SF->Port->Sea

SF->Den; 1000 | SF->Dal; 1500 | SF->Port->Sea->Bos 3400

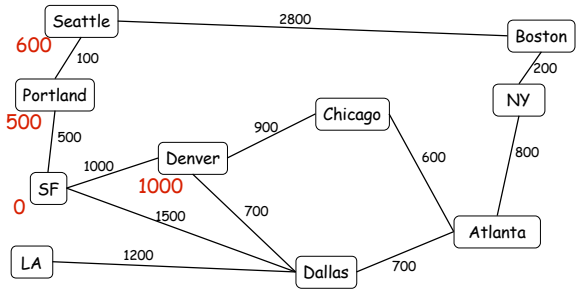

Current: 1000 SF->Den

SF->Dal; 1500 | SF->Port->Sea->Bos 3400

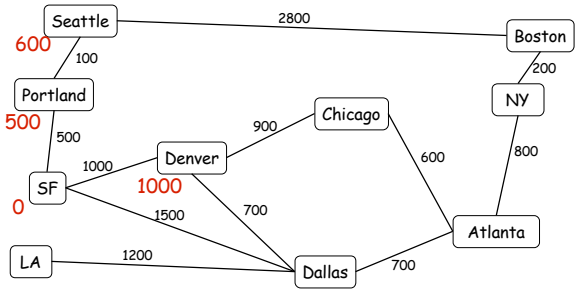

Current: 1000 SF->Den

SF->Dal; 1500 | SF->Den->Dal; 1700 | SF->Den->Chi; 1900 | SF->Port->Sea->Bos 3400

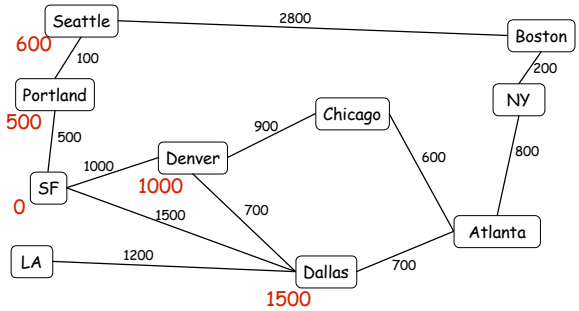

Current: 1500 SF->Dal

SF->Den->Dal; 1700 | SF->Den->Chi; 1900 | SF->Port->Sea->Bos 3400

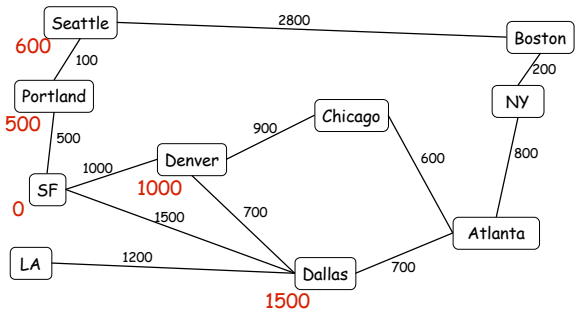

Current: 1500 SF->Dal

SF->Den->Dal; 1700	SF->Den->Chi; 1900	SF->Dal->Atl; 2200	SF->Dal->LA; 2700	SF->Port->Sea->B 3400

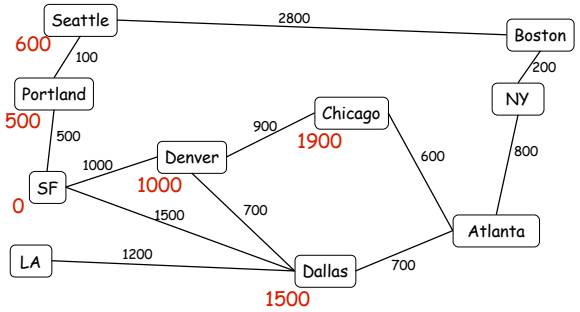

Current: 1900 SF->Den->Chi

SF->Dal->Atl; 2200	SF->Dal->LA; 2700	SF->Port->Sea->Bos 3400

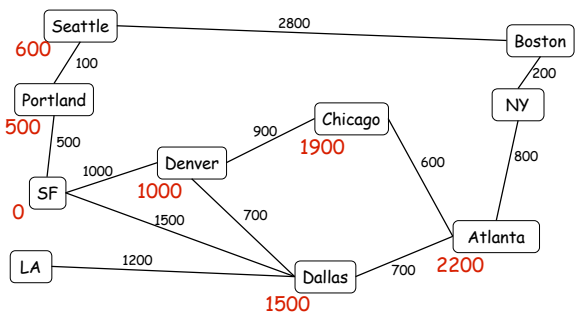

Current: 2200 SF->Dal->Atl

SF->Den->Chi->Atl; 2500	SF->Dal->LA; 2700	SF->Port->Sea->Bos 3400

Current: 1700 SF->Den->Dal

SF->Den->Chi; 1900	SF->Dal->Atl; 2200	SF->Dal->LA; 2700	SF->Port->Sea->Bos 3400

Current: 1900 SF->Den->Chi

SF->Dal->Atl; 2200	SF->Den->Chi->Atl; 2500	SF->Dal->LA; 2700	SF->Port->Sea->Bos 3400

Current: 2200 SF->Dal->Atl

SF->Den->Chi->Atl; 2500	SF->Dal->LA; 2700	SF->Dal->Atl->NY; 3000	SF->Port->Sea->Bos 3400

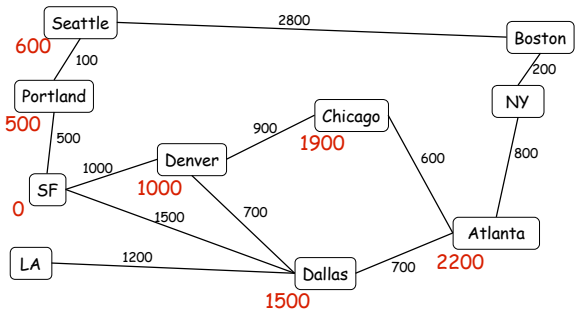

Current: 2500 SF->Den->Chi->Atl

SF->Dal->LA; 2700 SF->Dal->Atl->NY; 3000 SF->Port->Sea->Bos 3400

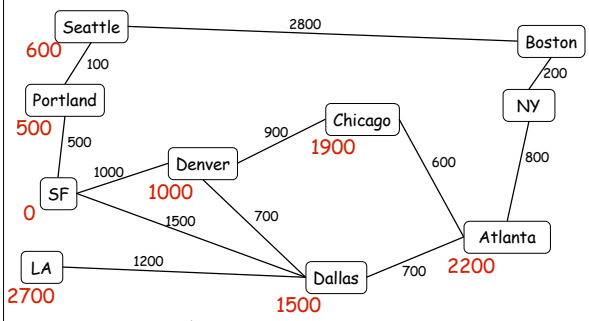

Current: 2700 SF->Dal->LA

SF->Dal->Atl->NY; 3000 SF->Port->Sea->Bos 3400

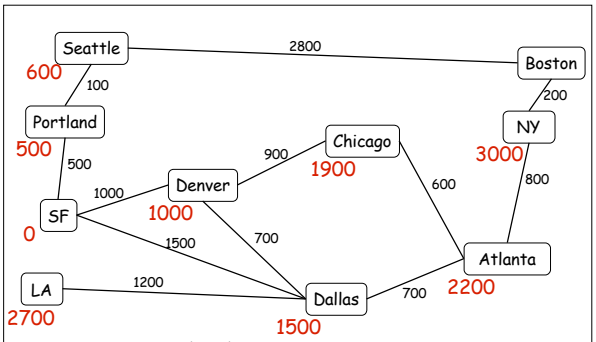

Current: 3000 SF->Dal->Atl->NY

SF->Port->Sea->Bos 3400

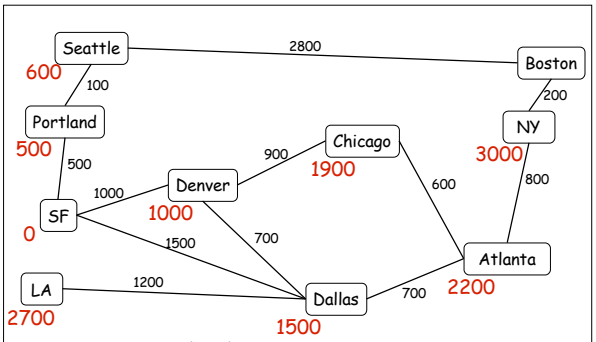

Current: 3000 SF->Dal->Atl->NY

SF->Dal->Atl->NY->Bos; 3200 SF->Port->Sea->Bos 3400

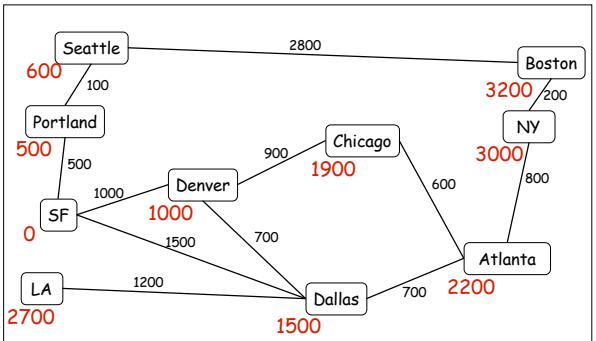

Current: 3200 SF->Dal->Atl->NY->Bos

SF->Port->Sea->Bos 3400

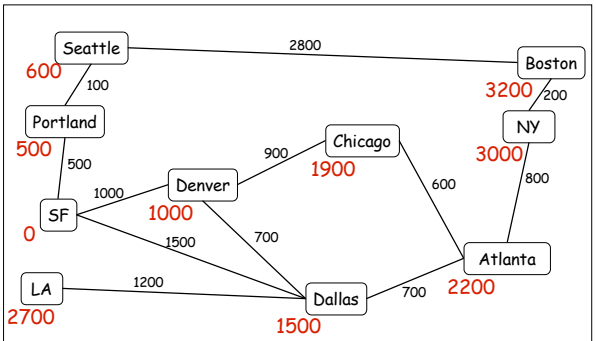

Current: 3400 SF->Port->Sea->Bos

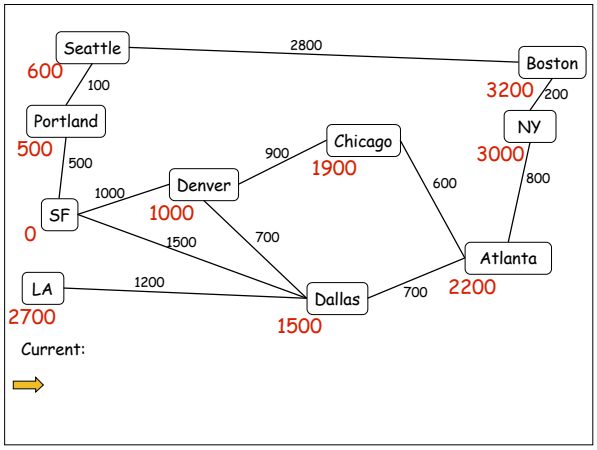
Seattle
600
2800
Boston
3200
100
200
Portland
500
NY
3000
500
900
Chicago
1900
600
800
1000
Denver
1000
SF
0
1500
700
Atlanta
2200
LA
2700
1200
Dallas
1500
700
Current: